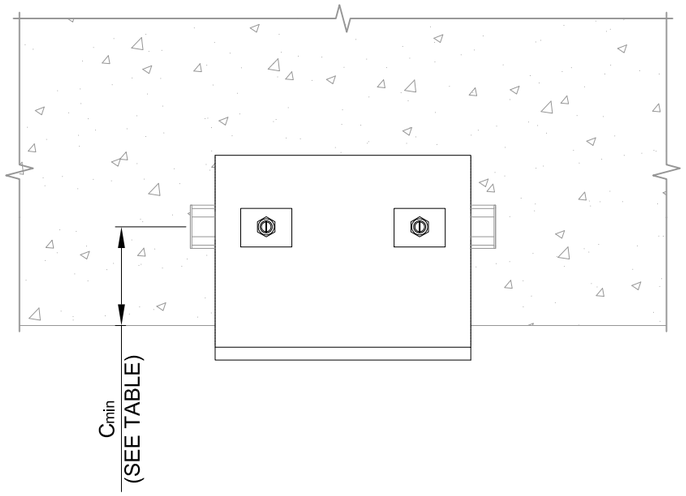

04 PLAN VIEW
N.T.S.

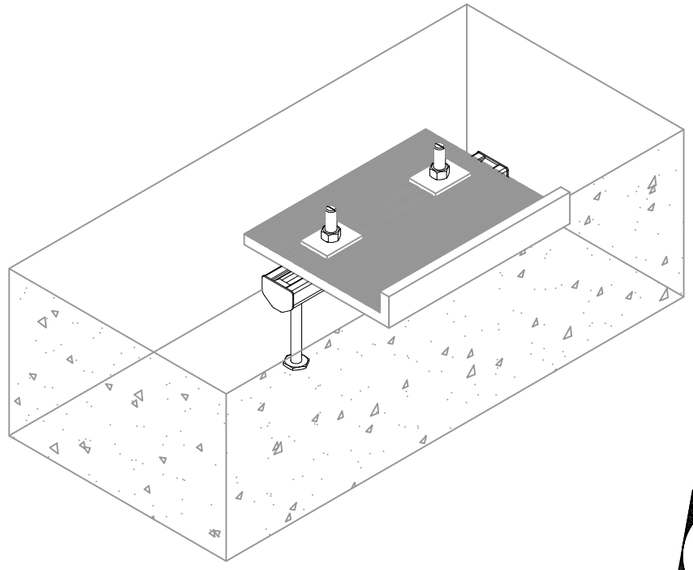

01 ISOMETRIC
N.T.S.

ELEV. 02
SHEET 1/1

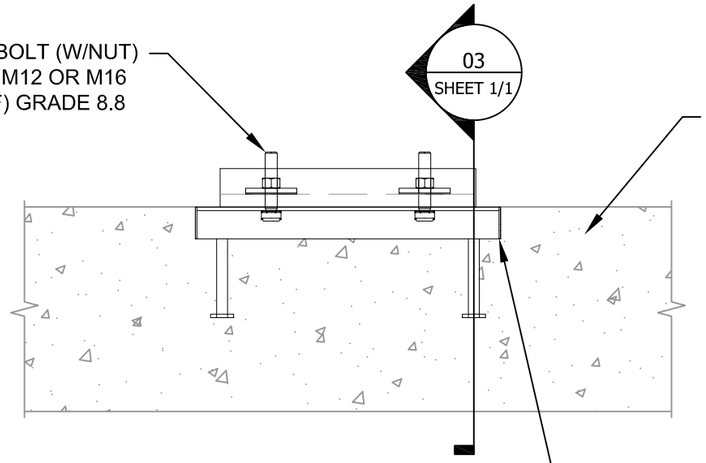

02 ELEVATION
N.T.S.

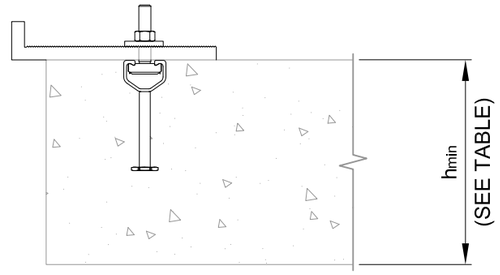

03 SECTION
N.T.S.

Anchor Channel Designation	Item No.	Channel Nom. Length	**Min. Concrete Thickness h_{min}	Min. Edge Distance $c_{min.}$
Anchor channel HAC-40 91/300 F	2107349	300 mm (12")	111 mm (4.37")	50 mm (2")
Anchor channel HAC-40 91/350 F	2122493	350 mm (14")	111 mm (4.37")	50 mm (2")
Anchor channel HAC-40 91/450 F	2122494	450 mm (18")	111 mm (4.37")	50 mm (2")
Anchor channel HAC-50 106/300 F	2107511	300 mm (12")	125 mm (4.92")	50 mm (2")
Anchor channel HAC-50 106/350 F	2122539	350 mm (14")	125 mm (4.92")	50 mm (2")
Anchor channel HAC-50 106/450 F	2122540	450 mm (18")	125 mm (4.92")	50 mm (2")
Anchor channel HAC-50 106/800 F	2122542	800 mm (32")	125 mm (4.92")	50 mm (2")
Anchor channel HAC-60 148/300 F	431850	300 mm (12")	168 mm (6.61")	75 mm (3")
Anchor channel HAC-60 148/350 F	431851	350 mm (14")	168 mm (6.61")	75 mm (3")
Anchor channel HAC-60 148/450 F	431852	450 mm (18")	168 mm (6.61")	75 mm (3")
Anchor channel HAC-70 175/300 F	431860	300 mm (12")	196 mm (7.72")	75 mm (3")
Anchor channel HAC-70 175/350 F	431861	350 mm (14")	196 mm (7.72")	75 mm (3")
Anchor channel HAC-70 175/450 F	431862	450 mm (18")	196 mm (7.72")	75 mm (3")

NOTE(S):

*1. NOTCHED T-BOLT FOR PARALLEL SHEAR FORCE (SHEAR FORCE PARALLEL TO LENGTH OF CHANNEL) APPLICATIONS.

**2. THICKNESS MAY INCREASE DEPENDING ON THE LEVEL OF EXPOSURE TO WEATHER, CORROSIVE ENVIRONMENT, AND SPECIFIC PROJECT CRITERIA.

T-Bolt Designation	Item No.	Thickness Fastened MAX.
HBC-C M12x60 8.8F	2095646	35 mm (1-3/8")
HBC-C M12x80 8.8F	2095647	55 mm (2-1/8")
HBC-C M12x100 8.8F	2019733	75 mm (2-15/16")
HBC-C M16x60 8.8F	2095650	30 mm (1-1/8")
HBC-C M16x80 8.8F	2095651	50 mm (1-7/8")
*HBC-C-N M16x60 8.8 F	2019736	30 mm (1-1/8")
*HBC-C-N M16x80 8.8 F	433479	50 mm (1-7/8")
*HBC-C-N M20x80 8.8 F	2019739	45 mm (1-3/4")

All loading and design criteria supplied by customer is assumed accurate. Only the stated Design Assumptions were considered, and must be verified by the responsible Engineer of Record (EOR). The basis of Hilti component and connection design is the published data in the current Hilti Technical Guide, including material and cross-section properties, allowable load values, factors of safety, methods of calculation, and limiting factors. The EOR must verify suitability for any specific application, and the capacity of the supportive structure to receive the shown configuration and associated reaction loads. Modification to components and/or design may alter performance and must be evaluated by the EOR.

PROJECT NAME:

HAC TYPICAL DETAILS

SERVICE REQUEST DESCRIPTION:

TOP OF SLAB APPLICATION

DESIGNED BY:	REVIEWED BY:
CAA	JAB
DRAWN BY:	ISSUE DATE:
BAP	25 JUL 13

REVISIONS:

NO:	DESCRIPTION:	DATE:
A	ORIGINAL ISSUE	25 JUL 13
B	REVISED TABLES AND TILTE BLOCK	34 SEPT 15

SERVICE REQUEST NUMBER:

13-228

DRAWING NUMBER:	SHEET:
01	1/1